Flat roof - fdrhbi02b-03

flat roof, timber frame construction, ventilated, with dry lining, not suspended, other surface

Performance rating

Fire protection performance	**REI**	60

maximum span = 5 m; maximum load $E_{d,fi}$ = 3,66 kN/m²
Classified by HFA

Thermal performance	**U**	0.18 W/(m²K)
	Diffusion	suitable

Calculated by HFA

Acoustic performance	**R_w ($C;C_{tr}$)**	48(-2;-6) dB
	$L_{n,w}$ (C_I)	

Assessed by TGM

Mass per unit area	**m**	59.10 kg/m²

Calculation based on gypsum plaster board type DF

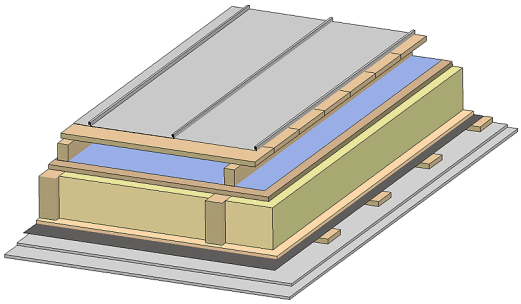

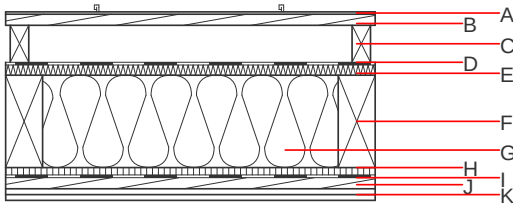

Note: The design of the under-roof construction and of the counter-battens have to be specified according to the roof pitch and the national requirements.

Register of building materials used for this application, cross-section (from outside to inside, dimensions in mm)

	Thickness	Building material	Thermal performance				Reaction to fire
			λ	μ min – max	ρ	c	EN
A		Plastic roofing membrane or					E
A		sheet metal roofing			7800		A1
B	24.0	spruce wood closed cladding without spacing of cladding boards	0.120	50	450	1.600	D
C	80.0	spruce wood counter battens (ventilation)	0.120	50	450	1.600	D
D		sarking membrane sd ≤ 0,3m			1000		E
E	22.0	softboard [045; 250] - rigid underlay	0.045	5	250	2.100	E
F	200.0	construction timber (80/*; e=800)	0.120	50	450	1.600	D
G	200.0	mineral wool [035; 50; <1000°C]	0.035	1	50	1.030	A1
H	16.0	particleboard	0.130	50 - 100	700	1.700	D
I		vapour barrier sd≥ 1m			1000		
J	24.0	spruce wood cladding with spacing of cladding boards(24/100); a=400	0.120	50	450	1.600	D
K	25.0	gypsum plaster board type DF (2x12,5 mm) or	0.250	10	800	1.050	A2
K	25.0	gypsum fibre board (2x12,5 mm)	0.320	21	1000	1.100	A2

Sustainability rating (per m²)

Database ecoinvent

$OI3_{Kon}$	64.2

Calculated by HFA

Details of sustainability rating

Database ecoinvent

Lifecycle (Phases)	GWP [kg CO_2-e.]	AP [kg SO_2-e.]	EP [kg PO_4-e.]	ODP [kg R11-e.]	POCP [kg Ethen-e.]	
A1 - A3		0.266	0.124	4,56E-6	0.045	

Lifecycle (Phases)	PERE [MJ]	PERM [MJ]	PERT [MJ]	PENRE [MJ]	PENRM [MJ]	PENRT [MJ]
A1 - A3	114.560	712.154	826.714	904.480	43.985	948.465