Pitched roof - sdmhbo02-02

pitched roof, solid wood construction, ventilated, without dry lining, without lining, wooden surface

Performance rating

Fire protection performance	**REI**	30

maximum span = 5 m; maximum load $E_{d,fi}$ = 5 kN/m² (without roof structure)
Classified by HFA

Germany

REI30

Load $E_{d,fi}$ according to the German certification document

Corresponding proof: manufacturer-specific

Thermal performance	**U**	0.15 W/(m²K)
	Diffusion	suitable

Calculated by TUM

Acoustic performance	**R_w ($C_;C_{tr}$)**	43(-1;-6) dB
	$L_{n,w}$ (C_I)	

Assessed by Müller-BBM

Mass per unit area	**m**	110.40 kg/m²

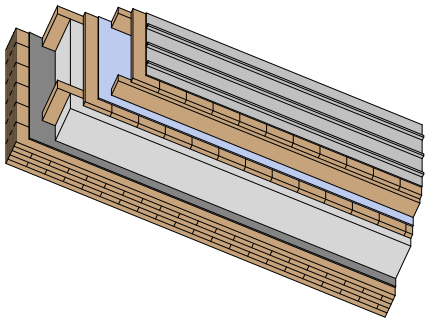

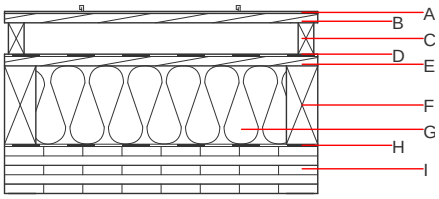

Note: The design of the under-roof construction and of the counter-battens have to be specified according to the roof pitch and the national requirements.

Register of building materials used for this application, cross-section (from outside to inside, dimensions in mm)

	Thickness	Building material	Thermal performance				Reaction to fire
			λ	μ min – max	ρ	c	EN
A		sheet metal roofing on structured separation layer			7800		A1
B	24.0	spruce wood formwork	0.120	50	450	1.600	D
C	80.0	spruce wood counter battens (40/80)	0.120	50	450	1.600	D
D	0.5	sarking membrane sd ≤ 0,3m			1000		E
E	24.0	planking spruce wood full formwork	0.120	50	450	1.600	D
F	240.0	construction timber (80/..; e=800)	0.120	50	450	1.600	D
G	240.0	Cellulose fibre [040; 50]	0.040	1	50	2.000	E
H	0.2	sealing sheet (air tight)					
I	120.0	cross laminated timber	0.130	50	500	1.600	D

Sustainability rating (per m²)

Database ecoinvent

$OI3_{Kon}$	40.7

Calculated by HFA

Database GaBi (ÖKOBAUDAT)

Built-in renewable materials	**kg**	114.490
Biogenic carbon in kg CO_2-e.	**kg CO_2**	163.240
Energy use of Primary Energy	**MJ**	1188.030
Share of renewable PE	**%**	37.57

Calculated by TUM

Details of sustainability rating

Database ecoinvent

Lifecycle (Phases)	GWP [kg CO_2-e.]	AP [kg SO_2-e.]	EP [kg PO_4-e.]	ODP [kg R11-e.]	POCP [kg Ethen-e.]	
A1 - A3		0.251	0.109	3,70E-6	0.071	

Lifecycle (Phases)	PERE [MJ]	PERM [MJ]	PERT [MJ]	PENRE [MJ]	PENRM [MJ]	PENRT [MJ]
A1 - A3	144.370	1559.987	1704.356	739.679	33.300	772.979

Database GaBi (ÖKOBAUDAT)

Lifecycle (Phases)	GWP [kg CO_2-e.]	AP [kg SO_2-e.]	EP [kg PO_4-e.]	ODP [kg R11-e.]	POCP [kg Ethen-e.]	
A1 - A3		0.168	0.029	4,07E-6	0.031	
C1 - C4		0.006	0.008	2,71E-7	0.001	
A1 - C4		0.174	0.036	4,34E-6	0.032	

Lifecycle (Phases)	PERE [MJ]	PERM [MJ]	PERT [MJ]	PENRE [MJ]	PENRM [MJ]	PENRT [MJ]
A1 - A3	445.296	1897.534	2343.874	717.039	80.931	797.447
C1 - C4	1.062	-1724.853	-1723.790	24.635	-0.159	24.476
A1 - C4	446.358	172.681	620.084	741.674	80.772	821.923